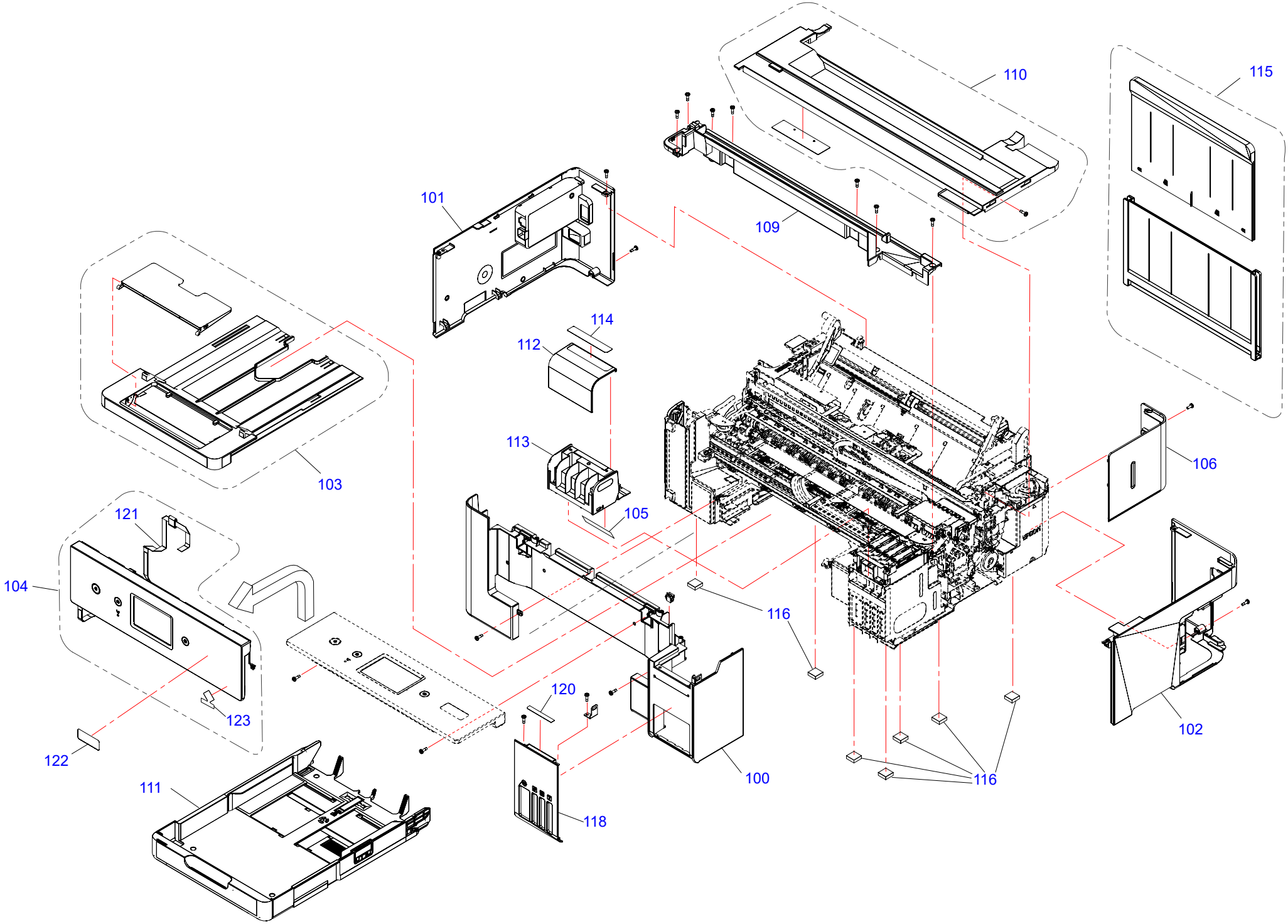Only numbered Service Parts are available.